Company: Joyoung International Trading Co.,Limited
Atten：Smiling
Mobile/WhatsApp:+86 18050035902
E-mail: info@htechplc.com
Website: https://www.joyoungintl.com/

EcoStruxure™

Foxboro™ DCS

Field Device Controller 280 (FDC280)

PSS 41H-2FDC280

Product Specification

Schneider Electric

Legal Information

The information provided in this document contains general descriptions, technical characteristics and/or recommendations related to products/solutions.

This document is not intended as a substitute for a detailed study or operational and site-specific development or schematic plan. It is not to be used for determining suitability or reliability of the products/solutions for specific user applications. It is the duty of any such user to perform or have any professional expert of its choice (integrator, specifier or the like) perform the appropriate and comprehensive risk analysis, evaluation and testing of the products/solutions with respect to the relevant specific application or use thereof.

The Schneider Electric brand and any trademarks of Schneider Electric SE and its subsidiaries referred to in this document are the property of Schneider Electric SE or its subsidiaries. All other brands may be trademarks of their respective owner.

This document and its content are protected under applicable copyright laws and provided for informative use only. No part of this document may be reproduced or transmitted in any form or by any means (electronic, mechanical, photocopying, recording, or otherwise), for any purpose, without the prior written permission of Schneider Electric.

Schneider Electric does not grant any right or license for commercial use of the document or its content, except for a non-exclusive and personal license to consult it on an "as is" basis.

Schneider Electric reserves the right to make changes or updates with respect to or in the content of this document or the format thereof, at any time without notice.

To the extent permitted by applicable law, no responsibility or liability is assumed by Schneider Electric and its subsidiaries for any errors or omissions in the informational content of this document, as well as any non-intended use or misuse of the content thereof.

Overview

The Foxboro™ DCS Field Device Controller 280 (FDC280) is a distributed, optionally fault-tolerant, field-mounted controller that performs process control and alarming functions according to a user-defined control strategy, as well as providing direct field device integration without the need for additional Foxboro DCS Fieldbus Modules (FBMs).

The primary purpose of the Field Device Controller 280 (FDC280) is device integration, including interfacing Ethernet and Serial field devices, accessing data in those devices for display, historization, and performing control tasks. The FDC280 performs regulatory, logic, timing, and sequential control internally. It also performs alarm detection and notification.

The FDC280 runs a dual-core CPU to provide two computational environments for the FDC280. Core 1 (Control Core) runs the FDC280's control software and Foxboro DCS Control Network communications software. Core 2 (I/O Core) runs additional features, in this case, the device integration software.

The FDC280 communicates directly with field devices that support the protocols listed in these PSSs:

- *Modbus Client TCP Driver for Field Device Controller 280* (PSS 41S-3FDCMBDV)
- *Modbus Client RTU Serial Driver for Field Device Controller 280* (PSS 41S-3FDCMBRT)
- *Triconex System Access Application Driver for Field Device Controller 280* (PSS 41S-3FDCTSAA)
- *OPC UA Client Driver for Field Device Controller 280* (PSS 41S-3FDCOPC)
- *EtherNet/IP Scanner Driver for Field Device Controller 280* (PSS 41S-3FDCIPDR)

The FDC280 connects to the Control Network via standard fiber optic or copper 100 Mbps Ethernet cables from network adapters installed on its baseplate.

The FDC280 requires a host workstation with Foxboro DCS Control Core Services software v9.3 or later.

The FDC280 is certified ISASecure EDSA Level 1.

Figure 1 - Fault-Tolerant FDC280 Module Pair Mounted on 2-Position FDC280 Baseplate

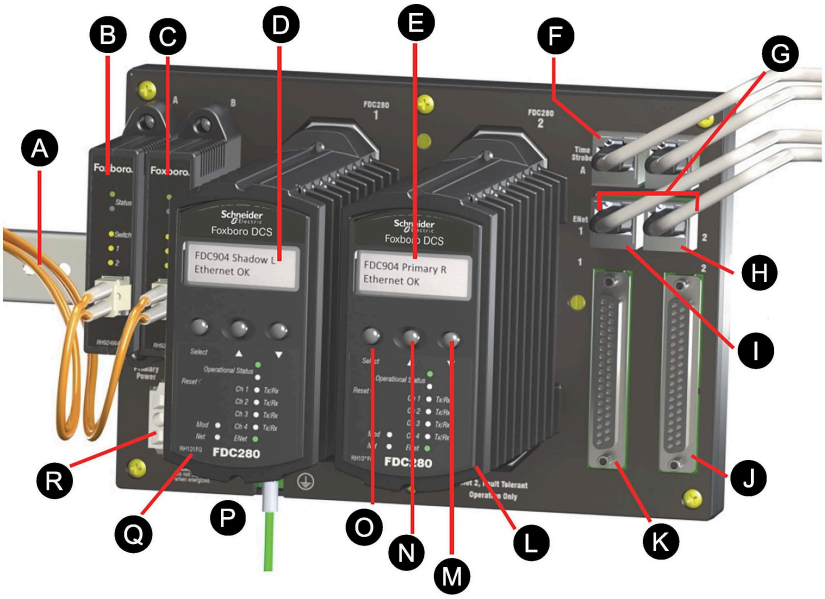

A	To Foxboro DCS Control Network
B and C	Network Adapters (Fiber Adapters Shown)
D and E	Liquid Crystal Display (LCD)
F	Time Strobe Connectors (A/B)
G	To Ethernet I/O Switches and Field Devices
H	Ethernet I/O Port for Right FDC280[(a)]
I	Ethernet I/O Port for Left FDC280[(a)]
J	Serial I/O Port for Right FDC280[(b)]
K	Serial I/O Port for Left FDC280[(b)]
L	Right FDC280
M	Down-Arrow Button
N	Up-Arrow Button
O	Select Button
P	Ground
Q	Left FDC280
R	Power

(a) These Ethernet ports enable communications via the customer-supplied dedicated network to the field devices.

(b) These Serial ports enable communications via the customer-supplied dedicated network to the field devices.

The fault-tolerant version of the FDC280 consists of two controller modules. These modules are installed in adjacent FDC280 slots in dedicated baseplates for high speed communication between the modules.

The FDC280 baseplate also includes the following types of connectors:

- Two Cat 5 RJ-45 connectors for Time Strobe connections that allow time strobe cables to connect directly to the baseplate without the need for Time Strobe Adapters.
- Two 10/100 Mbps or 1 Gbps copper Cat 5e or Cat 6 Ethernet RJ-45 connectors for Ethernet connections to supported field devices (via customer-supplied Ethernet switches).
- Two 37-pin D-type connectors, each of which supports four Serial ports (to field devices via supported termination assemblies). Use the Compact Type 5 cables in Termination Cables (Type 5) for the FDC280 Serial Termination Assemblies, page 23 to connect the FDC280's baseplate to the termination assemblies.

Unlike the Foxboro DCS Field Control Processor 280 (FCP280), the FDC280 does not support the PIO bus, as it is designed primarily for field device integration using the Ethernet and Serial protocols.

To estimate the FDC280's processor load, refer to *FDC280 Sizing Tool and Excel Workbook User's Guide* (B0700GS).

For a description of the FDC280 baseplate, refer to the *Standard 200 Series Baseplates* (PSS 41H-2SBASPLT).

FDC280 Ethernet Network Configurations

The FDC280 supports various Ethernet network configurations to connect with supported field devices. The FDC280 can connect directly to field devices with Ethernet I/O, or to field devices with Serial I/O via a protocol-specific gateway that performs the Ethernet-to-Serial I/O bridging.

Simplex FDC280 to Ethernet Field Devices Configuration

A simplex, non-fault-tolerant FDC280 connects to Ethernet field devices.

Figure 2 - Non-Fault-Tolerant FDC280 to Ethernet Field Devices (Simplified)

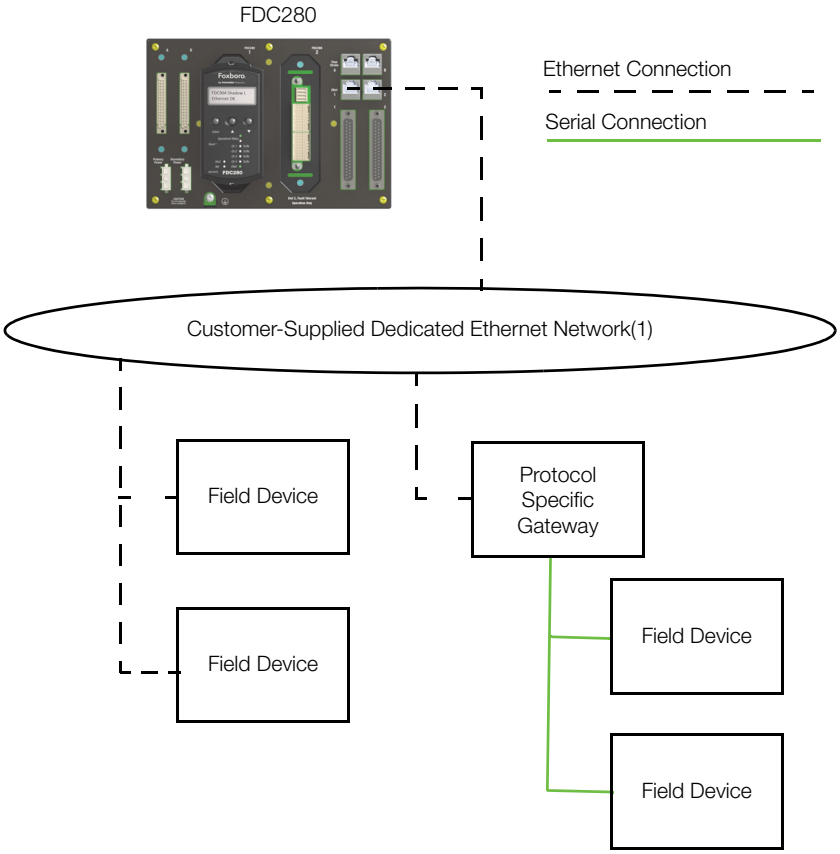

(1) We recommend using managed switches for maintenance and troubleshooting. However, field devices may also connect directly to the FDC280 baseplate without the Ethernet switches or hubs, which are part of the customer-supplied Ethernet network.

A simplex connection, such as this configuration, saves on cabling since it does not require a redundant connection to the field device's Ethernet I/O network from the FDC280.

Fault-Tolerant FDC280 to Ethernet Field Devices over Separate Networks Configuration

Fault-Tolerant FDC280s can connect to Ethernet field devices over separate networks.

Figure 3 - Fault-Tolerant FDC280s to Ethernet Field Devices in Separate Networks

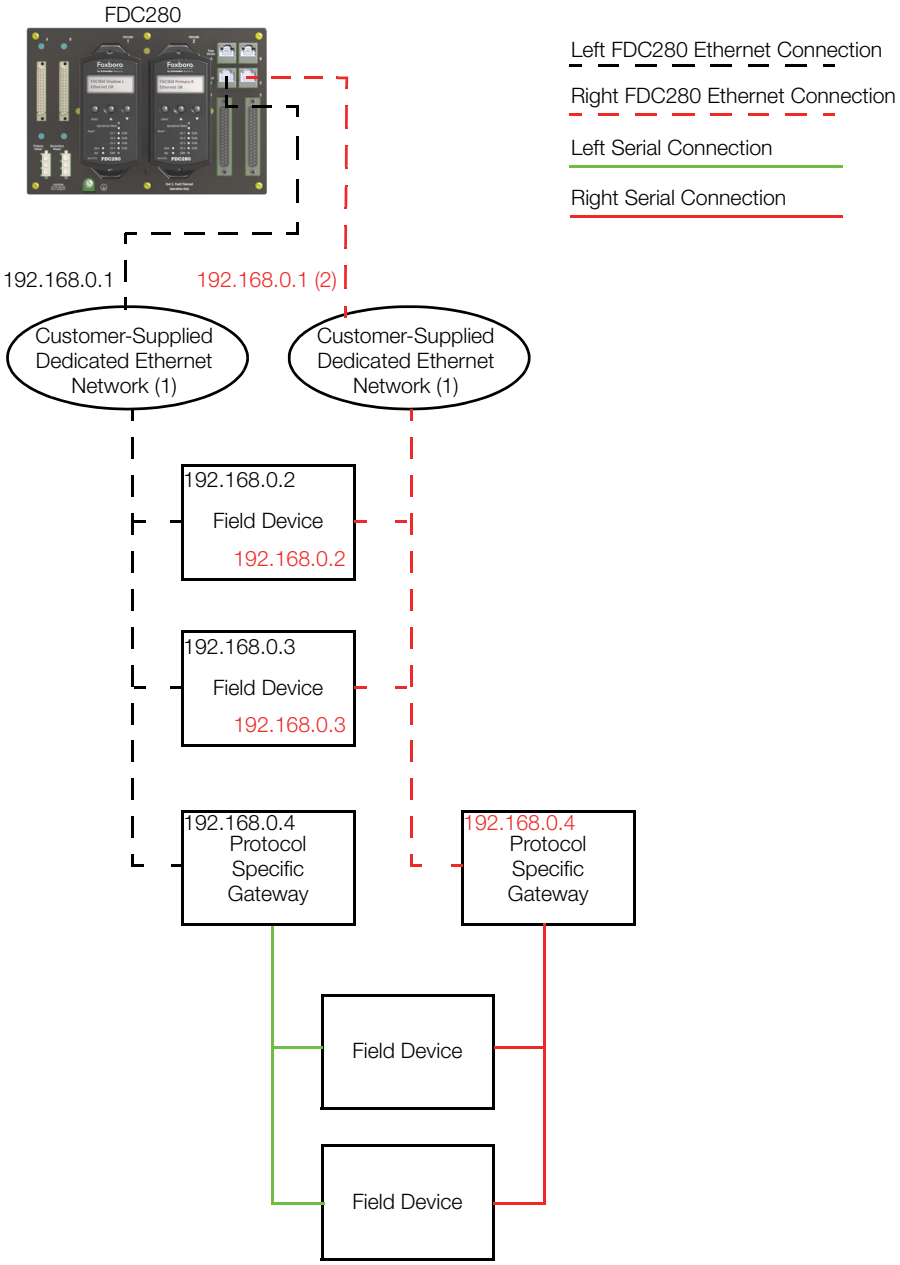

(1) When connecting to field devices via a network, we recommend using managed switches for maintenance and troubleshooting. Network is optional.

Each FDC280 module in a fault-tolerant pair may have the same IP address or may have a unique IP address when configured for redundant I/O networks. The FDC280 also supports field devices with redundant ports on redundant networks, where each port may have the same or a unique IP address.

Fault-Tolerant FDC280 to Ethernet Field Devices over Common Networks Configuration

Fault-Tolerant FDC280s can connect to Ethernet field devices over a common network. In cases where field devices do not need separate I/O networks, a common I/O network can be used. A common network allows for a fault-tolerant FDC280 to connect to single-ported field devices.

Figure 4 - Fault-Tolerant FDC280s to Ethernet Field Devices in Common Network

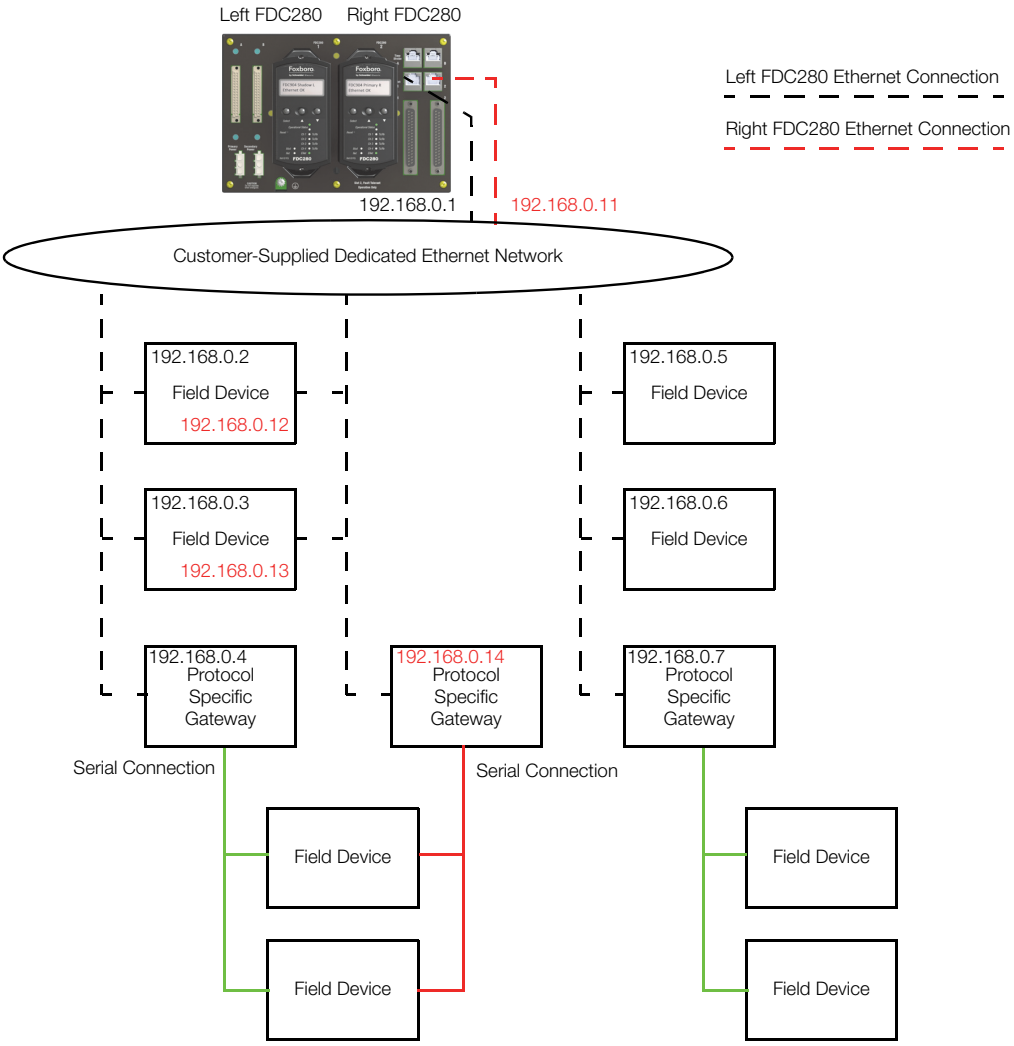

(1) We recommend using managed switches for maintenance and troubleshooting. However, field devices may also connect directly to the FDC280 baseplate without the Ethernet switches or hubs, which are part of the customer-supplied Ethernet network.

NOTE: For example, IP addresses use subnet 192.168.0.x with subnet mask 255.255.255.0.

FDC280 Serial Network Configurations

The FDC280 has four Serial ports. Each port can be individually configured for RS-232, RS-422, or RS-485. In non-redundant configurations, a simplex FDC280 is used for interfacing single ported field devices. In redundant configurations, the fault tolerant FDC280s (Left/Right) can both interface dual-ported and single-ported field devices (RS-232 via a Y cable). The FDC280 supports up to 128 RS-485 field devices distributed over its four ports. On a port configured for RS-485 protocol, the maximum number of devices supported is 32.

Simplex FDC280 to Serial Field Devices Configuration

A simplex, non-fault-tolerant FDC280 connects to Serial field devices via supported termination assemblies.

Figure 5 - FDC280 Simplex in Typical Serial Network Configurations

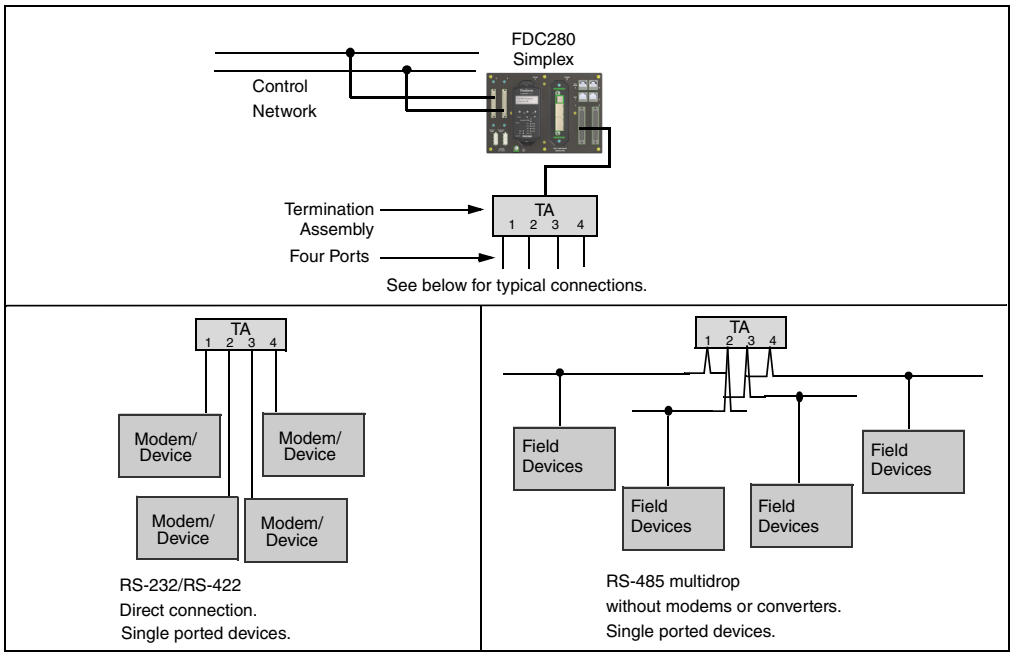

NOTE: Each FDC280 port (1 through 4) can be individually configured for RS-232, RS-422, or RS-485 communication standards.

Fault Tolerant FDC280 to Serial Field Devices Configuration

Fault-tolerant FDC280s can connect to serial field devices via supported termination assemblies. These images illustrate typical network configurations of dual-ported and single-ported serial devices.

Figure 6 - Fault-Tolerant FDC280 to Dual-Ported Serial Devices in Typical Network Configurations

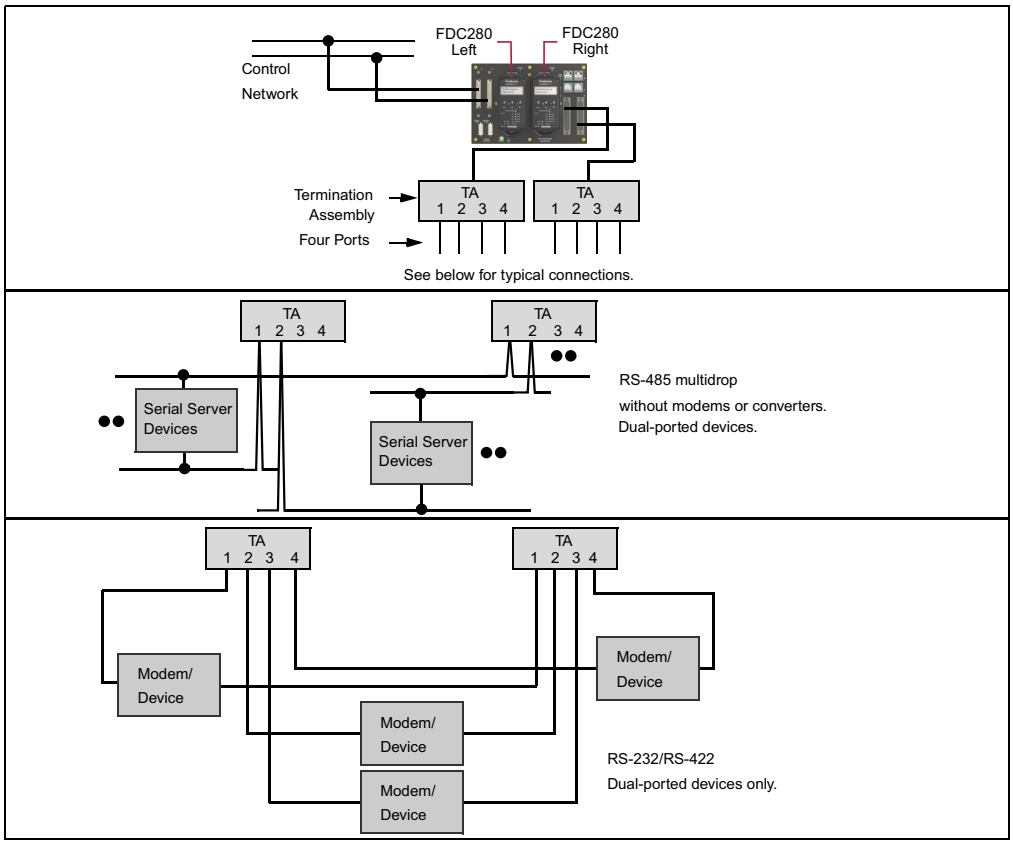

NOTE: Each FDC280 port (1 through 4) can be individually configured for RS-232, RS-422, or RS-485 communication standards.

Figure 7 - Fault-Tolerant FDC280 to Single-Ported Serial Devices in Typical Configurations

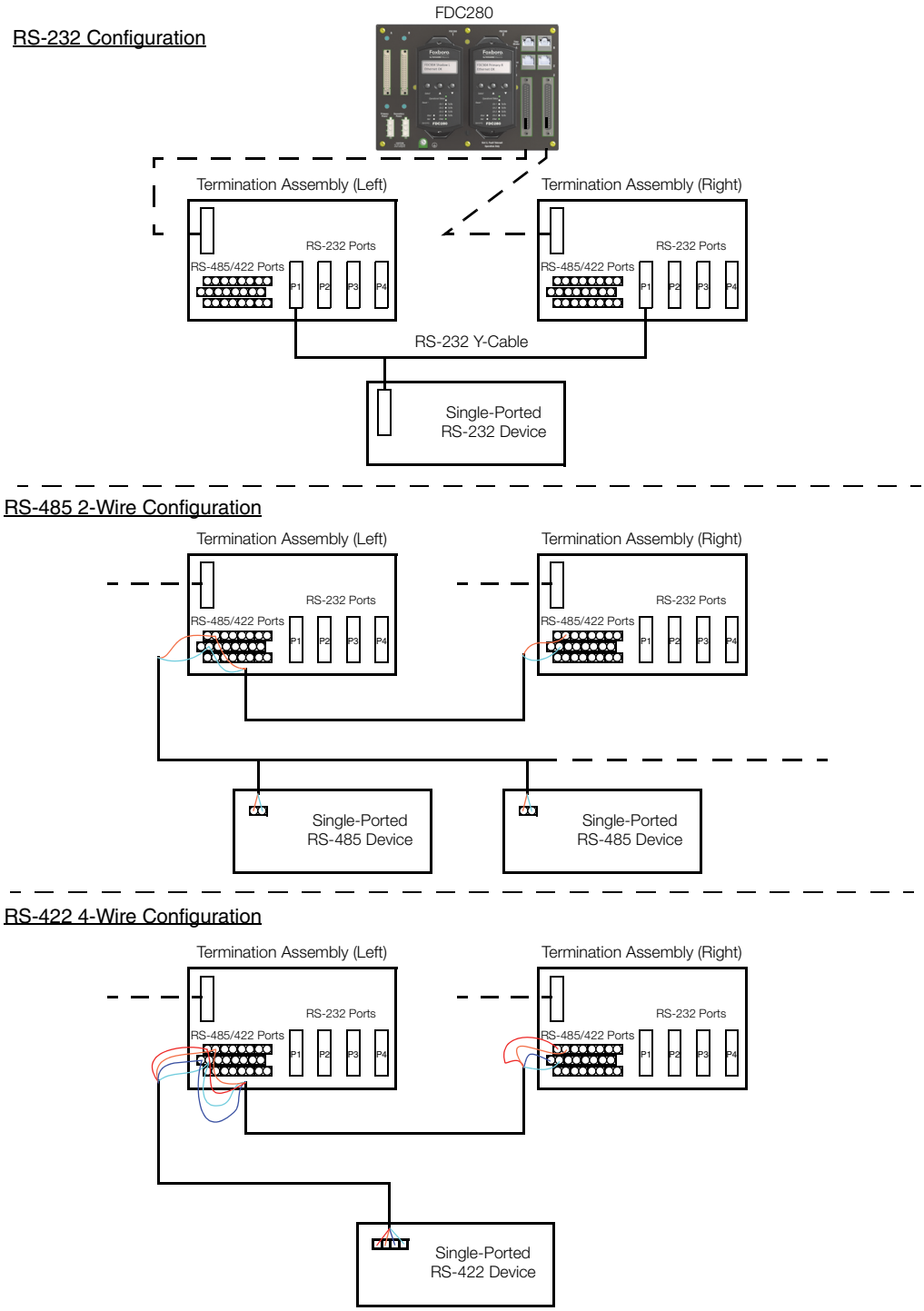

Features

- Supports up to 256 field devices, up to 8,000 soft I/O points, and up to 8,252 total blocks. For sizing guidelines, including examples of valid block count combinations, refer to *FDC280 Sizing Tool and Excel Workbook User's Guide* (B0700GS).
- Supports up to 128 Serial field devices with a maximum of 32 devices per each Serial port.
- Supports up to 32 instances of concurrent drivers, subject to driver support, including:
  - Multiple instances of the same driver
  - Multiple versions of the same driver
  - Multiple protocols
  - One instance of the Diagnostic Driver

Protocol	Part Number	Support for Concurrent Protocols	Support for Multiple Instances of Same Protocol
Modbus TCP Client	K0177AH	YES	YES
Modbus RTU & ASCII Client	K0177CV	YES	YES
TSAA Client	K0177DE	YES	YES
OPC UA Client	K0177EC	YES	NO (single instance only)
EtherNet/IP Scanner Driver	K0177EP	YES	YES

- Supports diagnosing communication issues with Ethernet or Serial devices with no physical disruption to device interfaces with a Diagnostic Driver. The driver can be configured to send all the messages exchanged with any device to a diagnostic application running on a workstation connected to the I/O Ethernet network.
- Support for multiple types of field devices using specific drivers.
- Performs regulatory, logic, timing, and sequential control internally.
- Performs data acquisition and alarm detection and notification.
- Supports self-hosting mode, which allows the FDC280 to boot itself with a valid control database even without its host workstation being online.
- Offers unique, patented, fault-tolerant operation using two control modules for communications over the Control Network. The FDC280 always supports redundant communications to the customer-supplied network that connects to the field device. However, if the field device is single-ported, the redundant cabling can only be extended to the switch if the device is Ethernet or the TA if the device is Serial.
- Provides separate Image Update capabilities for Major (typically new features and functions) and Minor software updates.
  - The Major Image Update process introduces significant new functionality that is not compatible with an online upgrade approach.
  - The Minor Image Update process can perform updates with no bump to the process other than a module failover.
- Liquid Crystal Display (LCD) displays letterbug and real-time roles and statuses.
- Uses soft letterbugs configurable via the buttons on the FDC280 faceplate.

- Connects to the Control Network via standard fiber optic or copper 100 Mbps Ethernet cables.
- Uses a rugged, die cast aluminum housing for mounting in a non-vented field enclosure.
- Can operate in Class G3 harsh environments.
- CE certified for field mounting in enclosures.
- Uses versatile control algorithms to provide control capabilities for a broad range of process applications.
- Supports time synchronization using optional external time from GPS satellites.

Fiber and Copper Network Adapters

FDC280 modules connect to a pair of fiber or copper adapters which each connect to one Ethernet switch in the Control Network. The FDC280 baseplate passes inbound traffic from either of the two switches to both FDC280s, and passes outbound traffic from the primary FDC280 module to either switch.

Figure 8 - Fiber Optic and Copper Network Adapters

Fiber Adapter (RH924WA) Copper Adapter (RH924UQ)

The fiber or copper adapters mount on the FDC280 baseplate as shown in Fault-Tolerant FDC280 Module Pair Mounted on 2-Position FDC280 Baseplate, page 4. They receive their power from the baseplate.

Remote Mounting

The FDC280 simplifies the Foxboro DCS architecture when integrating field devices. It requires housing (via field enclosures), host workstations with Control Core Services v9.3 or later, and Ethernet switches for communication via the Control Network architecture, described in *Control Network Ethernet Equipment* (PSS 41H-7NWEQUIP), as well as customer-supplied switches for field device communication.

The field-mounted FDC280 is an integral part of the highly-distributed Control Network where controllers are installed in a central location, then connected remotely to their I/O and the actual equipment being controlled via a customer-supplied dedicated network. Coordination between process units takes place via the Foxboro DCS Control Network, a fiber optic 100 Mbps Ethernet network. Coordination between the FDC280 and its I/O field devices takes place over a customer-supplied dedicated copper 10/100 Mbps or 1 Gbps Ethernet network.

The FDC280 is packaged in a rugged, die cast aluminum housing that does not require venting due to its efficient design. The FDC280 and its network adapters are CE certified, and can be mounted without expensive special cabinets to help prevent electronic emissions. The FDC280, network adapters, and baseplate can be mounted in Class G3 harsh environments.

Enhanced Reliability

Fault-Tolerance on the Foxboro DCS Control Network

When two FDC280s are installed on the same FDC280 baseplate and have two Ethernet connections to the Foxboro DCS Control Network, they undergo a “marriage” operation, which allows them to provide a continuous connection to the control network to allow fault-tolerant operation to be possible. This is a unique and patented operation that improves availability over the use of a single FDC280.

Both modules receive and process information simultaneously, and faults are detected by the modules themselves. One of the significant methods of fault detection is comparison of Control Network communication messages at the module external interfaces. Messages for the Control Network only (not for the field devices) leave the FDC280 when both FDC280s agree on the message being sent (bit for bit match).

> **NOTE:** Communication between FDC280s and field devices is considered redundant, not fault-tolerant. Fault-tolerant types of checks are not performed over the two Ethernet connections that the FDC280s use to communicate to the customer-configured field device network.

Upon identifying a detected fault, self-diagnostics are run by both FDC280s to determine which module is affected. The non-affected module then assumes control without affecting normal system operations.

This is called “fault-tolerancy” although it is not the only fault-tolerant operation that the FDC280 supports.

Core 1 CPU Fault-Tolerance

The Core 1 CPUs in a fault-tolerant pair of FDC280s also operate in a fault-tolerant fashion, with a Primary and Shadow Core 1. If the FDC280 detects any issues with the operation of the Primary Core 1, the Primary and Shadow FDC280s swap roles.

Core 2 CPU Redundancy

The Core 2 CPUs in the Primary and Shadow FDC280s operate in a redundant manner. Both Primary and Shadow Core 2 CPUs evaluate and independently publish their diagnostic statuses and device connection statuses (of enabled devices). If the Primary Core 2 detects any fault on its own side, it compares its statuses to or against the statuses reported by the Shadow Core 2. If the Shadow Core 2 is seen to have a better connectivity to the devices, the Primary Core 2 relinquishes its Primary role by resetting itself.

I/O Side Redundancy

The redundancy of the FDC280 pair on the I/O side of the network, coupled with the high coverage of detected faults, provides very high subsystem availability time. Either FDC280 may be replaced without upsetting field I/O signals to the other module. An FDC280 can be removed or replaced without removing power from the FDC280 baseplate.

The Primary FDC280 accesses the field devices for reading and writing I/O points while the Shadow FDC280 uses heartbeat commands to check the connection status of the devices. The Shadow FDC280 is updated with the I/O point values internally, so if the Primary FDC280 loses connection to one or more devices with the Shadow FDC280 having good connections to all devices, the failover operation occurs with no

bump to the process. Field data from the new Primary FDC280 starts flowing into the process as soon as the devices are able to accept new connections for data access.

Time Synchronization

The Foxboro DCS System supports time synchronization using either:

- An externally maintained optional source of Universal Coordinated Time (UTC) from GPS satellites
- An internal source using proprietary software to synchronize the Foxboro DCS Main TimeKeeper that in turn synchronizes the time in the FDC280

All input data from the field is time stamped as it is received by the FDC280, scanned with a minimum scan time of 10 times per second. For more information, see the *Time Synchronization Overview* (PSS 41S-1TIME).

Time stamping is used for alarm messages, values sent to the Historian, and optionally for the input data from the field when received from the field devices that do not support time stamping.

Time strobe signals are delivered from custom switches over Ethernet cables directly connected to the FDC280 baseplate.

Control Features

The FDC280 performs regulatory, logic, timing, and sequential control, as well as data acquisition, alarm detection, and alarm notification. Process variables are controlled using time-proven algorithms (mathematical computations performing specific functions). The algorithms are contained in functional control blocks, which on-site process engineers configure to implement the desired control strategies.

The versatility of the algorithms provides control capabilities suited to a broad range of process applications, which allows the FDC280 to scan a high number of external device points. Control strategies ranging from simple feedback and cascade loops to highly sophisticated feedforward, nonlinear, and complex characterization control schemes are readily implemented.

The FDC280 also supports an optional self-hosting mode that allows the FDC280 to start up and run, executing its configured control scheme using the checkpoint file stored in flash memory. This allows the FDC280 to boot itself with a valid control database even if its host workstation is not present.

FDC280 Baseplate

The FDC280 is installed on a modular, DIN rail mounted baseplate in a dedicated slot that is keyed for the controller, helping to ensure that the modules cannot be installed in baseplate slots for which they are not designed. The FDC280 baseplate is shown in Fault-Tolerant FDC280 Module Pair Mounted on 2-Position FDC280 Baseplate, page 4.

This 2-position baseplate supports a non-fault-tolerant single or fault-tolerant pair of FDC280s, as well as two copper (RH924UQ) or fiber (RH924WA) adapters, required for connection to the Control Network.

The FDC280 baseplate provides two 10/100 Mbps or 1 Gbps copper Ethernet RJ-45 connectors for Ethernet connectors to field devices (via customer-supplied Ethernet switches).

The FDC280 baseplates can be added in the field to existing or new configurations. The standard FDC280 baseplates have larger dimensions than the FCP270 or FCP280 standard 2-position baseplates, but use less space than a control processor-and-FBMs solution. The FDC280 baseplate can be installed on either a horizontal or vertical DIN rail, provided that the baseplate itself remains in the orientation shown in Fault-Tolerant FDC280 Module Pair Mounted on 2-Position FDC280 Baseplate, page 4. However, to meet Marine certification requirements, it must be installed on a horizontal DIN rail only.

LED Indicators

Light-emitting diodes (LEDs) on the front of the FDC280 module provide visual indication of the:

- FDC280 operational status
- Operational status of the Ethernet connection to the field devices

LED indicators on the copper or fiber network adapters provide visual indication for:

- Internal and external power supply health status
- Communications activity to the Control Network A and B links, and to the FDC280(s)

Liquid Crystal Display (LCD)

The FDC280 has a liquid crystal display (LCD) on its faceplate, which displays various status and identification information:

- The first line typically displays the FDC280’s letterbug and role (Primary/Shadow/Single), and if the FDC280 is installed in the left-most or right-most slot in its baseplate.
- The second line displays the FDC280's part number, FDC280 image version, hardware revision information (including manufacture date), and the Foxboro DCS Control Network Ethernet connections status.

FDC280 Functional Specifications

Processor Type	Control Processor: Dual core ARM® System on a Chip (SOC) with stored programs, using high-speed communication capability. Error Detection: ECC providing single-bit error detection and correction as well as multiple-bit error detection.
Process I/O Capacity	256 field devices Scan up to 8,000 field points, with a minimum scan time of 100 ms
Maximum Number of Blocks Configured	Supports a maximum of 8,252 blocks including the Station block, ECB compounds, Primary ECBs, and Standard ECBs required to support 256 devices, 8,000 I/O points, and their associated Control blocks. For sizing guidelines, including examples of valid block count combinations, refer to *FDC280 Sizing Tool and Excel Workbook User's Guide* (B0700GS).
Block Executions Per Second	16,000 blocks/second, maximum
Maximum Number of Blocks Processed	The number of blocks that can be processed per block processing cycle (BPC) time interval depends on scan periods and block type selection. These blocks include all types (control blocks, ECBs, compounds, data blocks, and so forth). For sizing guidelines, see *FDC280 Sizing Tool and Excel Workbook User's Guide* (B0700GS).
Minimum Block Processing Cycle (BPC)	100 ms
Sequence Block Size	32 KB maximum for each block
Maximum Number of IPC Connections	231;200 connections for source points; 30 connections for sink points; 1 connection for internal use only An IPC connection provides the means to exchange continuous process control information. A Source point is defined as a connection to a destination device that can have data sourced by a given CP. Thus an FDC280 can provide data to up to 200 destination stations. A Sink point is defined as an external point to which the FDC280 can connect to acquire process control data. The FDC280 can receive continuous updates from up to 30 other data sources.
Maximum Number of OM Sink Lists	75 lists A Sink list is a list of items to be delivered to a particular destination. These lists provide an efficient way to group updates to a given destination.

Maximum OM Scanner Database	28,000 maximum points 18,000 points/second, maximum rate of OM scanner change before ignition of throttling mechanism 18,000 points for BPC ≥ 200 ms 7,500 points for BPC = 100 ms The Object Manager (OM) scanner database is the total of all points in the control scheme for which the FDC280 is scanning and providing updates to other stations.
Maximum Number of OM Sink Points	11,250 points The OM sink point limitations refer to the number of points that can be received from outside sources.
Configurable Block Periods	0.1, 0.2, 0.5, 0.6, 1, 2, 5, 6, 10, 30 seconds 1, 10, 60 minutes
Block Processing Cycle	0.1, 0.2, 0.5 and 1.0 seconds, selectable at system configuration time
Time to Marry Fault-Tolerant Modules	Less than 0.5 seconds
Internal Diagnostics	Self-checking performed at power-up. Run-time diagnostics performed during normal operations. When FDC280s are configured as a fault-tolerant pair, constant synchronization checking and message compare operations for messages communicated over the Control Network are also used to detect hardware faults.
Power Requirements	Input voltage (redundant voltage): 24 V dc typical Consumption (per non-redundant module: 8.5 W, maximum
Regulatory Compliance: Electromagnetic Compatibility (EMC)	• *EMC Directive 2014/30/EU* Meets: EN 61326-1 Class A Emissions and Industrial Immunity Levels.
Regulatory Compliance: Product Safety	• *Underwriters Laboratories (UL) for U.S. and Canada* Underwriters Laboratories (UL) for U.S. and Canada UL/UL-C listed as suitable for use in Class I, Groups A-D; Division 2; enclosure based systems when installed. Communications circuits also meet the requirements for Class 2 as defined in Article 725 of the National Electrical Code (NFPA No.70) and Section 16 of the Canadian Electrical Code (CSA C22.1). For more information, see *Standard and Compact 200 Series Subsystem User's Guide* (B0400FA). • *European Low Voltage Directive 2014/35/EU and Explosive Atmospheres (ATEX) Directive 2014/34/EU* ATEX (DEMKO) Ex nA IIC T4 Gc certified when installed as described in the *Standard and Compact 200 Series Subsystem User's Guide* (B0400FA). For use in an enclosure suited for an ATEX Zone 2 classified area.
RoHS Compliance	Complies with European RoHS Directive 2011/65/EU, including amending Directives 2015/863 and 2017/2102.
Regulatory Compliance: Security	ISASecure™ Certification, EDSA Level 1

FDC280 Environmental Specifications

	Operating	Storage
Temperature	-20 to 60°C (-4 to 140°F)	-40 to +70°C (-40 to +158°F)
Relative Humidity	5 to 95% (Noncondensing)	5 to 95% (Noncondensing)
Altitude	Up to +3,000 m (+10,000 ft)	-300 to +12,000 m (-1,000 to +40,000 ft) Per MIL-STD 810G, method 500.5, PI
Contamination	Class G3 (Harsh) as defined in ISA Standard, S71.04. No effect on functionality after simulated 10-year exposure to mixed gas testing per EIA Standard 364-65A, Class III. The FDC280 has Conformal Coating.	N/A
Vibration	0.5 g (5 to 500 Hz)	N/A

NOTE: The environmental limits of this module may be enhanced by the type of enclosure containing the module. Refer to the applicable product specification sheet (PSS) that describes the specific type of enclosure that is to be used.

FDC280 Physical Specifications

Configuration	Single processor module. The fault-tolerant version consists of two processor modules, with an interconnecting fault-tolerant connector integral to the baseplate.
Mounting	May be placed in device specific 2-position baseplates designed for horizontal or vertical mounting. For the fault-tolerant FDC280, the two modules must be mounted in dedicated slots to allow for interconnecting fault-tolerant communication and to allow for the proper airflow to cool the modules.
Dimensions: Module	• Height: 105 mm (4.13 in) or 116 mm (4.59 in) including mounting lugs • Width: 51.8 mm (2.04 in) • Depth: 147 mm (5.80 in)
Weight (Maximum)	• Module: 0.8 kg (1.78 lb) for a single, non-fault-tolerant module. • Termination Assemblies for Serial Communications: ◦ Ring Lug (P0926PA)[(a)]: 363 g (0.8 lb) approximate ◦ Compression Screw (RH926GH) 272 g (0.6 lb) approximate
Part Numbers	• FDC280: RH101FQ • FDC280 Baseplate: RH101KF • Fiber Adapter: RH924WA (Rev. E or later) • Copper Adapter: RH924UQ (Rev. D or later) • Termination Assemblies for Serial Communications: ◦ TA Ring Lug: P0926PA[(a)] ◦ TA Compression Screw: RH926GH
Control Network Ethernet Switch to FDC280 Cabling	Cabling Connectors: • Fiber Adapter: Two ceramic type LC connectors on one end (for network adapters) with an MT-RJ connector on the other end (for switch) • Copper Adapter: RJ-45 connectors on both ends Fiber Optic Cable: • Cable Material: Multimode fiber (MMF) 62.5/125 µm plenum • Cable Lengths: Up to 50 m (164 ft) – Foxboro supplied. Refer to “Network Cabling for FDC280 Network Adapters” in *Field Device Controller 280 (FDC280) User’s Guide* (B0700GQ) for the appropriate specifications of allowed fiber optic cabling. Greater than 50 m – user supplied • Maximum Length: 2 km (6,560 ft) from the Ethernet switch to the FDC280 Copper Cable: • Cable Material: 1000Base-T Cat 5 copper Ethernet cable • Cable Lengths: Up to 100 m (328 ft) – Foxboro supplied. Refer to “Network Cabling for FDC280 Network Adapters” in *Field Device Controller 280 (FDC280) User’s Guide* (B0700GQ) for the appropriate specifications of allowed copper cabling • Maximum Length: 100 m (328 ft) from the Ethernet switch to the FDC280

Field Device Ethernet Switch to FDC280 Cabling	Cabling Connectors: • 10/100 Mbps or 1 Gbps copper Ethernet RJ-45 connectors on both ends Copper Cable: • Cable Material: 1000Base-T Cat 5e or Cat 6 copper Ethernet cable • Cable Lengths: Up to 100 m (328 ft) – Foxboro supplied. Refer to “Network Cabling for FDC280 Network Adapters” in *Field Device Controller 280 (FDC280) User’s Guide* (B0700GQ) for the appropriate specifications of allowed copper cabling • Maximum Length: 100 m (328 ft) from the Ethernet switch to the FDC280
FDC280 to Termination Assembly Serial Cabling	Use the Compact Type 5 cables in Termination Cables (Type 5), page 23 to connect the FDC280’s baseplate to the termination assemblies for Serial connections.
Bus Characteristics	• General: Electronic Industrial Association (EIA) RS-232, RS-422 or RS-485 communications selectable on a per port basis. The RS-485 physical communication medium consists of twisted-pair shielded copper cable containing a single conductor pair. The RS-422 is a 4-wire physical communication medium. The RS-232 physical communication medium is a DB-25 cable to a customer supplied device/modem/converter. • EIA RS-232, RS-422 and RS-485 I/O Communication: Asynchronous communication, direct connect link (RS-232). ◦ Transmission rate: 300, 600, 1200, 2400, 4800, 9600, 19200, 38400, 57600 and 115200 baud ◦ Protocol: 8-bit characters; odd, even or no parity, 1 or 2 stop bits
(a) This is not an RoHS part.	

Figure 9 - FDC280 Dimensions

Termination Cables (Type 5)

Table 1 - Termination Cables (Type 5) for the FDC280 Serial Termination Assemblies

Cable Part Number	Length
RH100HV	1.0m (3.3 ft)
RH100HW	1.5m (4.9 ft)
RH100HX	2.0m (6.6 ft)
RH100HY	3.0m (9.8 ft)
RH100HZ	5.0m (16.4 ft)

RS-232 Cables, Single Ported Device to Single TA

Table 2 - RS-232 Communication Cables, Single Ported Device to Single TA (Simplex FDC280)

Option	Length	Cable Part Number
RS-232 VT100	6m (20 ft)	RH970XD
	12m (40 ft)	RH970WY
RS-232 Modem	6m (20 ft)	RH970XC
	12m (40 ft)	RH970WX
DCE (Local)	6m (20 ft)	RH970XD
	12m (40 ft)	RH970WY

RS-232 Cables, Single Ported Device to Two TAs

Table 3 - RS-232 Communication Cables, Single Ported Device to Two TAs (Fault Tolerant FDC280)

Option	Length	Cable Part Number
RS-232 Y-Cable	6m (20 ft)	RH100MM
	12m (40 ft)	RH100MN

FDC280 Baseplate Functional Specifications

Power Requirements	• Input Voltage Range (Redundant): 24 VDC +5%, -10% • Power Cabling Cable Lengths: 0.4 m (16 in) up to 2.1 m (7 ft)
Regulatory Compliance, Electromagnetic Compatibility (EMC)	• *EMC Directive 2014/30/EU*: Meets: EN 61326-1 Class A Emissions and Industrial Immunity Levels.
Regulatory Compliance, Product Safety	• *Underwriters Laboratories (UL) for U.S. and Canada*: Underwriters Laboratories (UL) for U.S. and Canada UL/UL-C listed as suitable for use in Class I, Groups A-D; Division 2; enclosure based systems when installed. Communications circuits also meet the requirements for Class 2 as defined in Article 725 of the National Electrical Code (NFPA No.70) and Section 16 of the Canadian Electrical Code (CSA C22.1). For more information, see *Standard and Compact 200 Series Subsystem User's Guide* (B0400FA). • *European Low Voltage Directive 2014/35/EU and Explosive Atmospheres (ATEX) Directive 2014/34/EU*: ATEX (DEMKO) Ex nA IIC T4 Gc certified when installed as described in the *Standard and Compact 200 Series Subsystem User's Guide* (B0400FA). For use in an enclosure suited for an ATEX Zone 2 classified area.

FDC280 Baseplate Environmental Specifications

	Operating	Storage
Temperature	-20 to +70°C (-4 to +158°F)	-40 to +70°C (-40 to +158°F)
Relative Humidity	5 to 95% (Noncondensing)	5 to 95% (Noncondensing)
Altitude	-300 to +3,000 m (-1,000 to +10,000 ft)	-300 to +12,000 m (-1,000 to +40,000 ft)
Contamination (Non-Enclosure Mounted)	Class G3 (Harsh) as defined in ISA Standard S71.04	
Contamination (Enclosure Mounted)	Class G3 (Harsh) as defined in ISA Standard S71.04. Pollution degree 2 as defined in IEC 664-1.	

NOTE: The environmental limits of the 200 Series baseplates may be enhanced by the type of enclosure containing the 200 Series baseplate. Refer to the applicable product specification sheet (PSS) that describes the specific type of enclosure that is to be used.

FDC280 Baseplate Physical Specifications

Mounting	• DIN Rail: FDC280 baseplates mount on a non-isolated, mechanically supported vertical or horizontal DIN rail, which can be internal to, or external to an enclosure. The FDC280 baseplate attaches to the DIN rail by means of fasteners. However, to meet Marine certification requirements, the baseplate must be installed on a horizontal DIN rail only. • Rack Mount: A mounting kit (P0930AS) is available for horizontal mounting of the FDC280 baseplate in a standard, 483 mm (19-inch) rack. This kit provides a 25.4 mm (1 inch) mounting depth.
Rack Mounting Bracket	Material: Steel, Cold-Rolled, 0.0598 mm (16 Gauge)
Mass (Without Modules)	~0.53 kg (1.17 lb)
Size	• Height: 150 mm (5.9 in) • Width: 216 mm (8.5 in) • Depth: 31.4 mm (1.24 in) or 39.7 mm (1.56 in) including feet
Construction	• Material: PC and ABS, inflammability UL94 V0 • Color: Black

Dimensions - Nominal

Figure 10 - Compression Screw Termination Assembly RH926GH

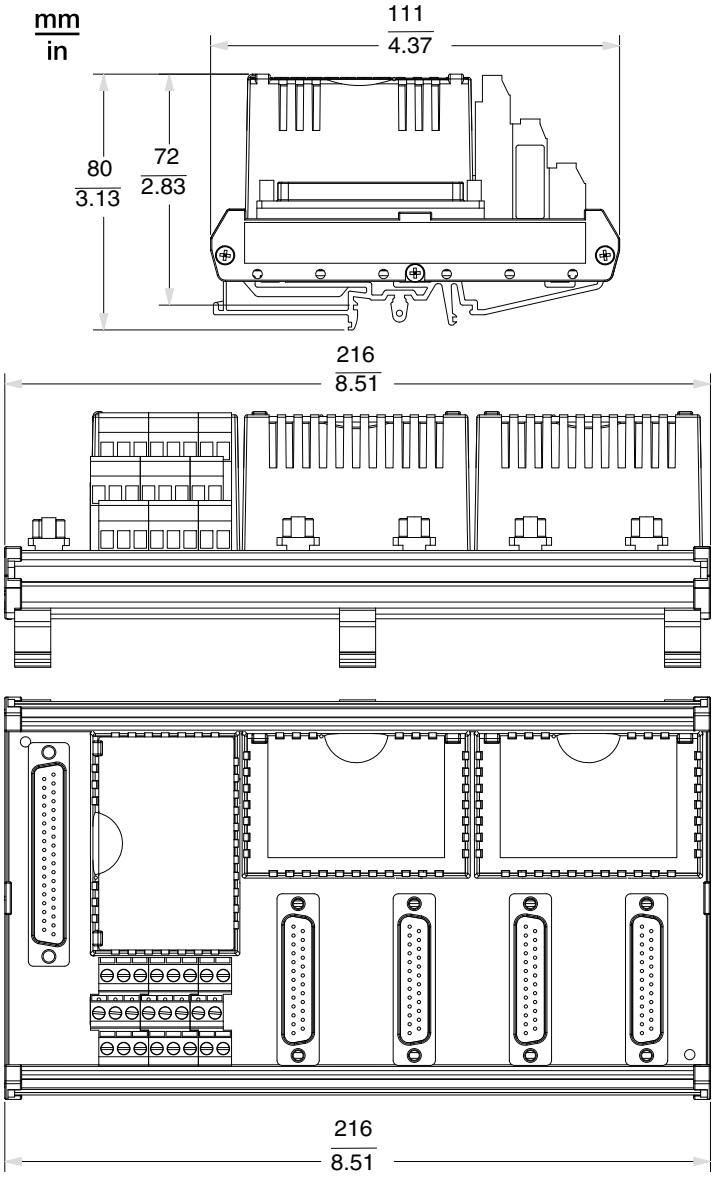

Figure 11 - Ring Lug Termination Assembly (P0926PA)[1]

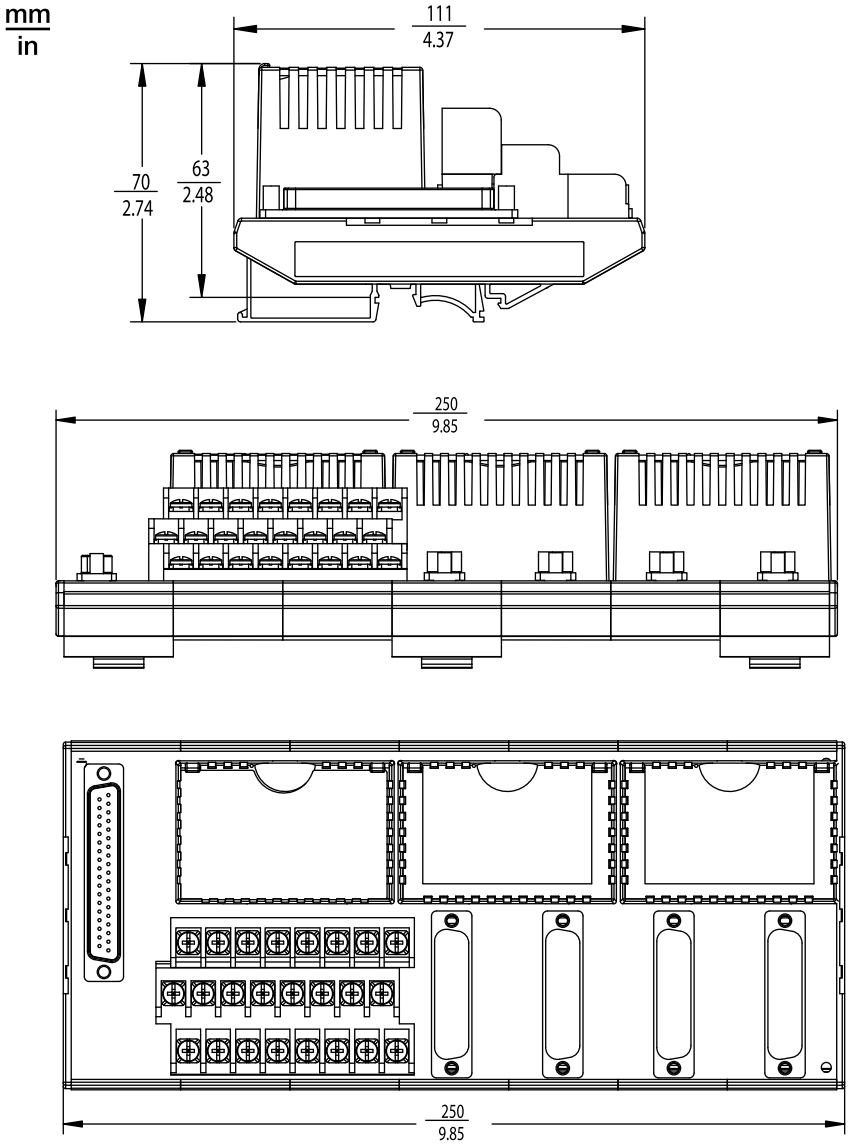

[1] This not an RoHS part.

Related Documents

Document Number	Description
B0400FA	*Standard and Compact 200 Series Subsystem User's Guide* (B0400FA)
B0700GQ	*Field Device Controller 280 (FDC280) User's Guide* (B0700GQ)
PSS 41H-2FPS400	*Standard 200 Series Power Supply - FPS400-24* (PSS 41H-2FPS400)
PSS 41H-2C480	*Compact Power Supply - FPS480-24* (PSS 41H-2C480)
PSS 41H-2CERTS	*Standard and Compact 200 Series I/O - Agency Certifications* (PSS 41H-2CERTS)
PSS 41H-2FPS	*200 Series Power Supplies - FPS240-24 and FPS120-24* (PSS 41H-2FPS)
PSS 41H-2GOV	*G-Series Enclosures Overview* (PSS 41H-2GOV)
PSS 41H-2SBASPLT	*Standard 200 Series Baseplates* (PSS 41H-2SBASPLT)
PSS 41H-2SOV	*Standard 200 Series Subsystem Overview* (PSS 41H-2SOV)
PSS 41H-7NWEQUIP	*Control Network Ethernet Equipment* (PSS 41H-7NWEQUIP)
PSS 41S-1TIME	*Time Synchronization Overview* (PSS 41S-1TIME)
PSS 41S-3FCPICS	*Field Control Processor 280 (FCP280) Integrated Control Software* (PSS 41S-3FCPICS)
PSS 41S-3FDCMBDV	*Modbus Client TCP Driver for Field Device Controller 280* (PSS 41S-3FDCMBDV)
PSS 41S-3FDCMBRT	*Modbus Client RTU Serial Driver for Field Device Controller 280* (PSS 41S-3FDCMBRT)
PSS 41S–3FDCOPC	*OPC UA Client Driver for Field Device Controller 280* (PSS 41S-3FDCOPC)
PSS 41S-3FDCIPDR	*EtherNet/IP Scanner Driver for Field Device Controller 280* (PSS 41S-3FDCIPDR)
PSS 41S-3FDCTSAA	*Triconex System Access Application Driver for Field Device Controller 280* (PSS 41S-3FDCTSAA)